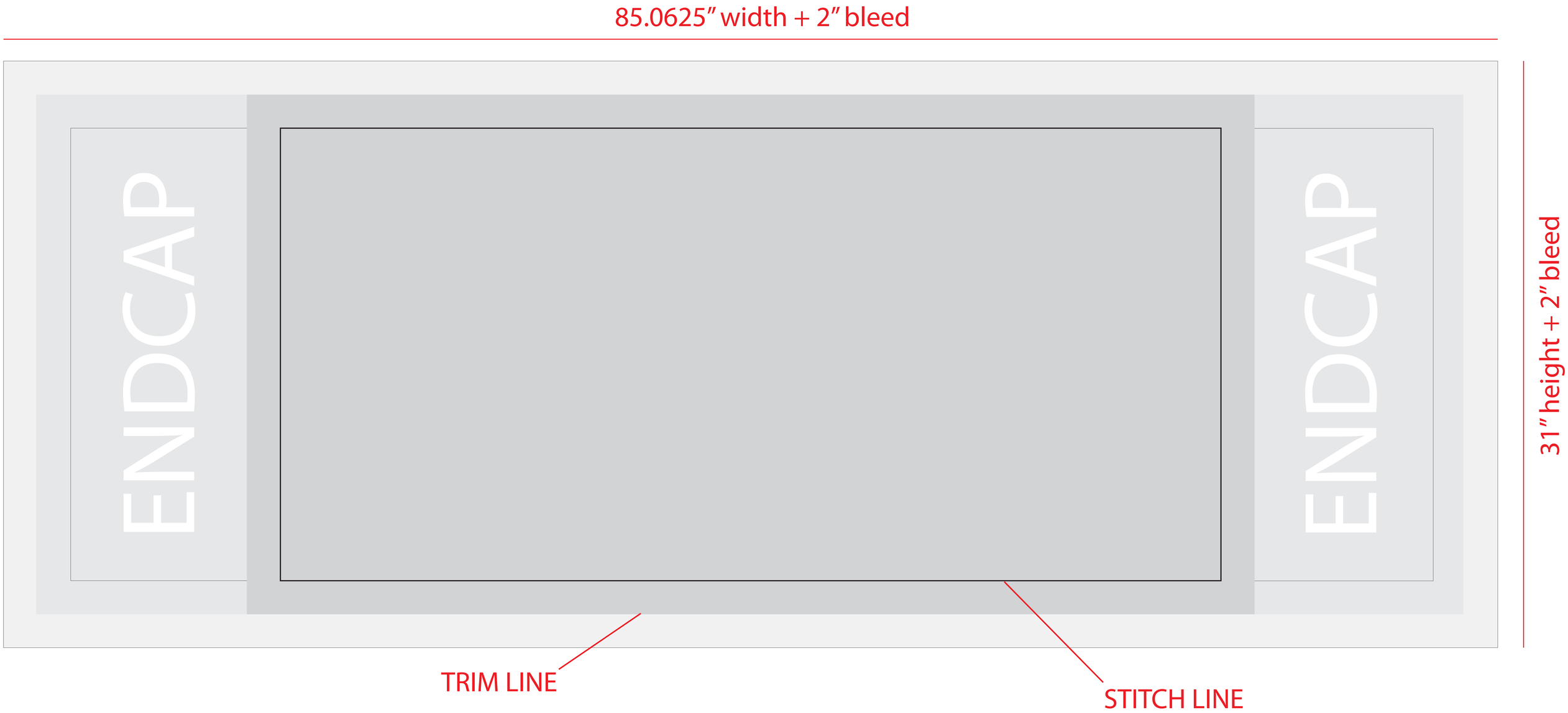
85.0625″ width + 2″ bleed
31″ height + 2″ bleed
ENDCAP
ENDCAP
TRIM LINE
STITCH LINE