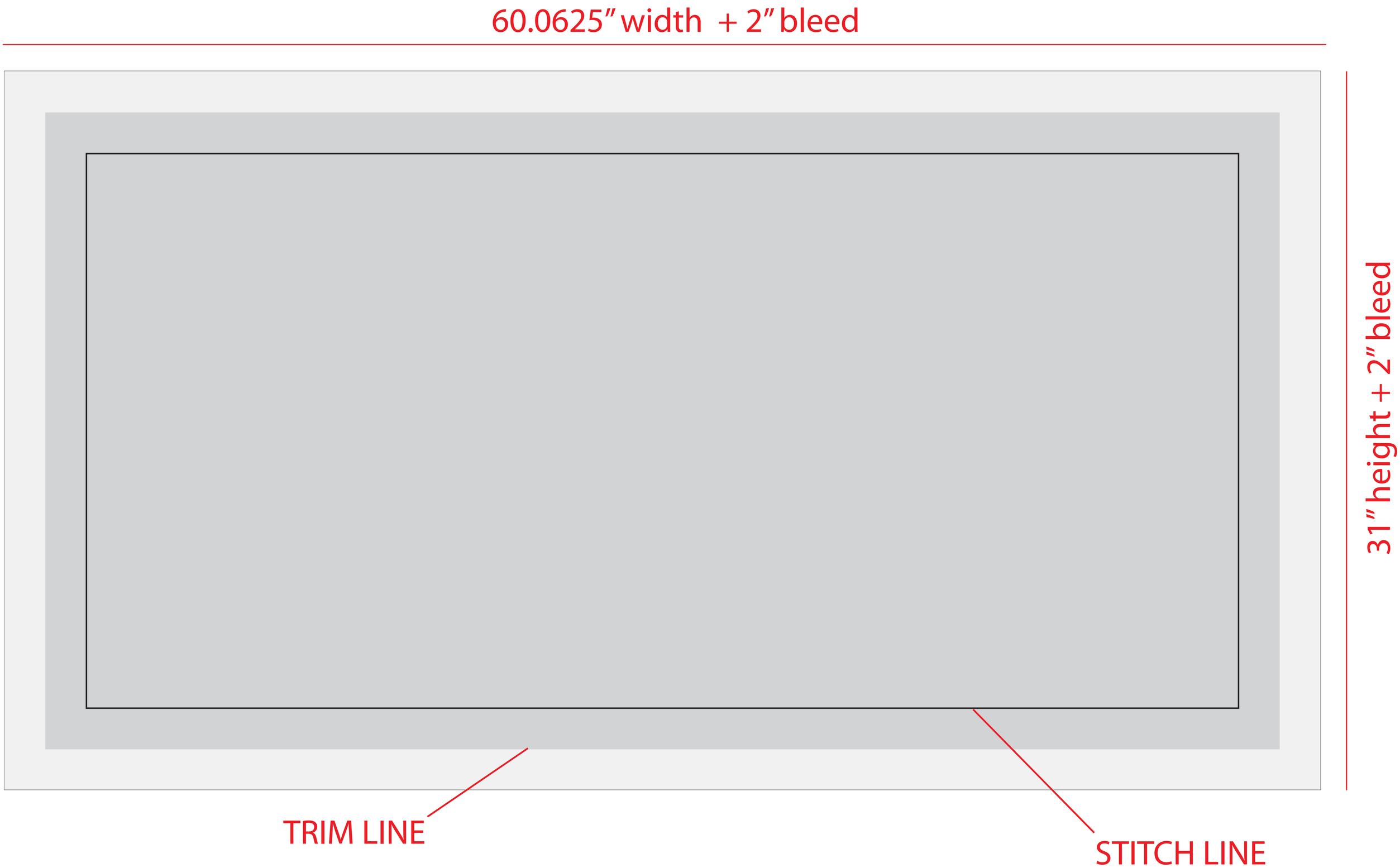
60.0625″ width + 2″ bleed
31″ height + 2″ bleed
TRIM LINE
STITCH LINE